Base Unit Analog Input Threshold to Digital Output Energized to Interposing Relay Valve Solenoid

APPLICATION DRAWING

When the Analog Input Threshold is reached the Digital Output of the Base Unit is energized the Contact is closed to negative polarity. The Interposing relay coil is energized. A and C contact of the Interposing relay close connecting negative polarity of the battery to the Valve Solenoid.

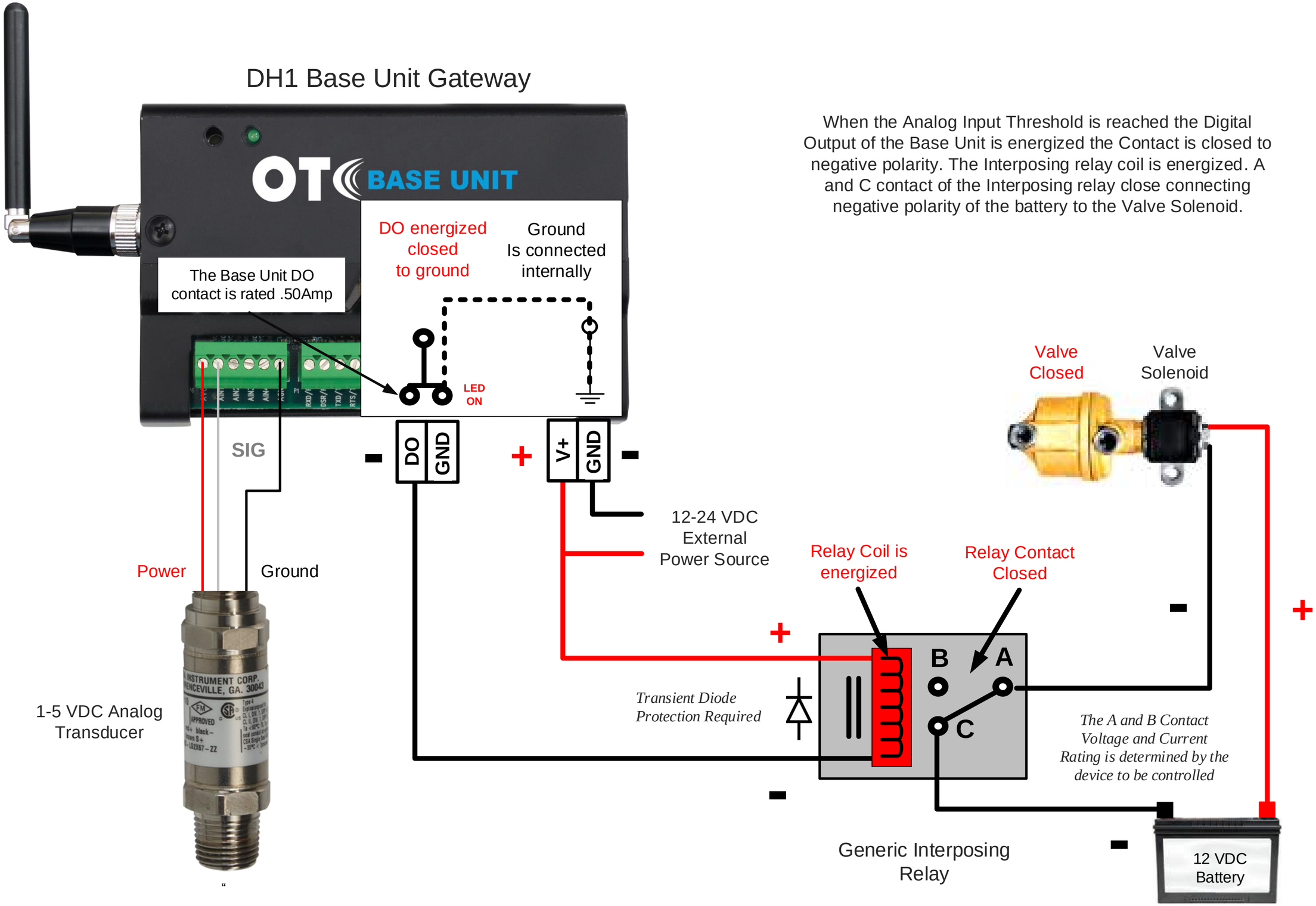

©2015 OleumTech Corporation. OleumTech is a registered trademark of OleumTech Corporation. Other trademarks are the property of their respective owners. Specifications, design, and product descriptions subject to change without notice. Doc ID: AD-223-100c